ALDERCOTE

V125
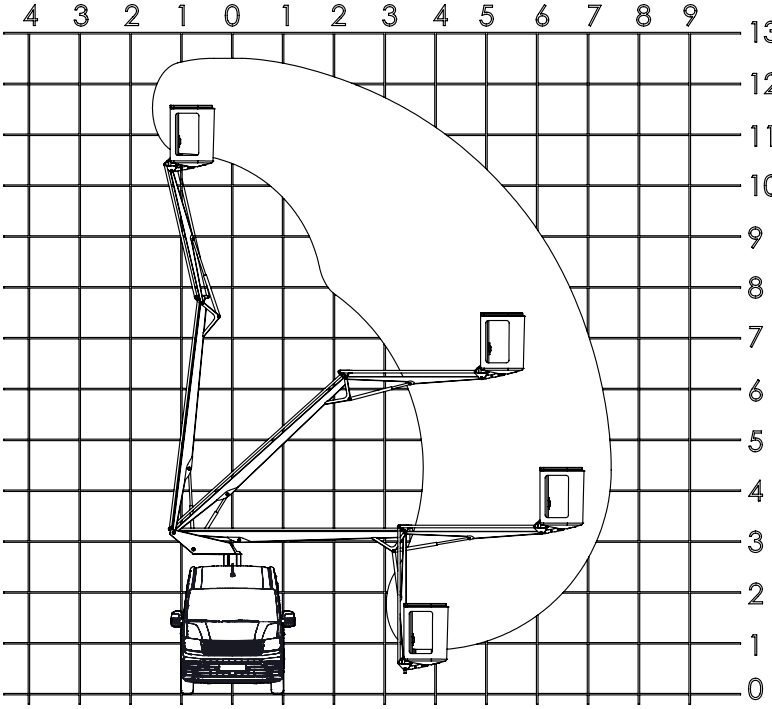
MOUNTED ON A
MAN TGE 5T
LWB H2 RWD.